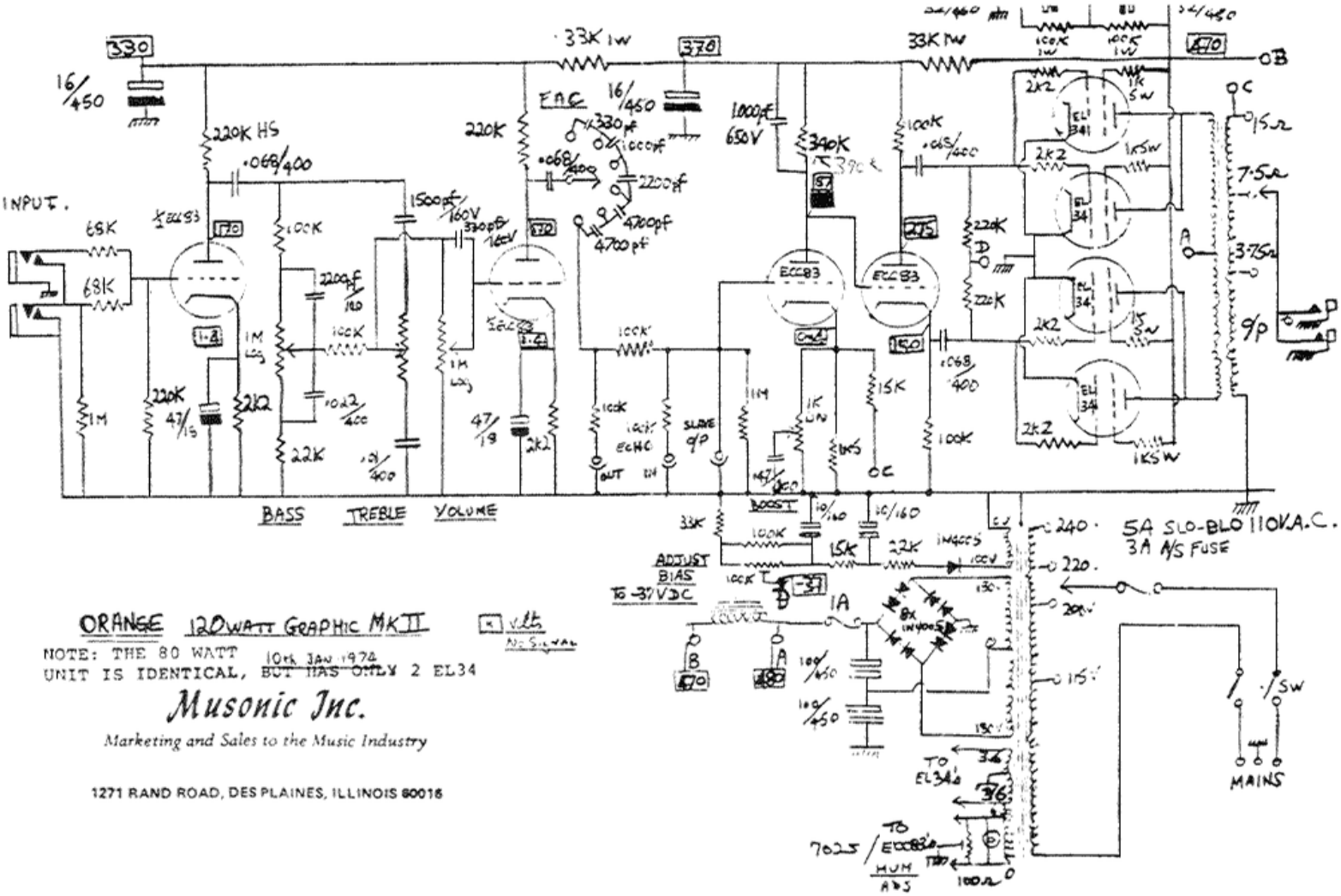
INPUT.
BASS
TREBLE
VOLUME
ECC83
EL34
ECC83
ECC83
EAC
ECHO
SLAVE o/p
BOOST
ADJUST BIAS TO -37 VDC
5A SLO-BLO 110V.A.C.
3A A/S FUSE
MAINS
TO EL34's
TO ECC83's
HUM ADJ
7025
ORANGE 120 WATT GRAPHIC MK II
NOTE: THE 80 WATT UNIT IS IDENTICAL, BUT HAS ONLY 2 EL34
10th JAN 1974
Musonic Inc.
Marketing and Sales to the Music Industry
1271 RAND ROAD, DES PLAINES, ILLINOIS 60016