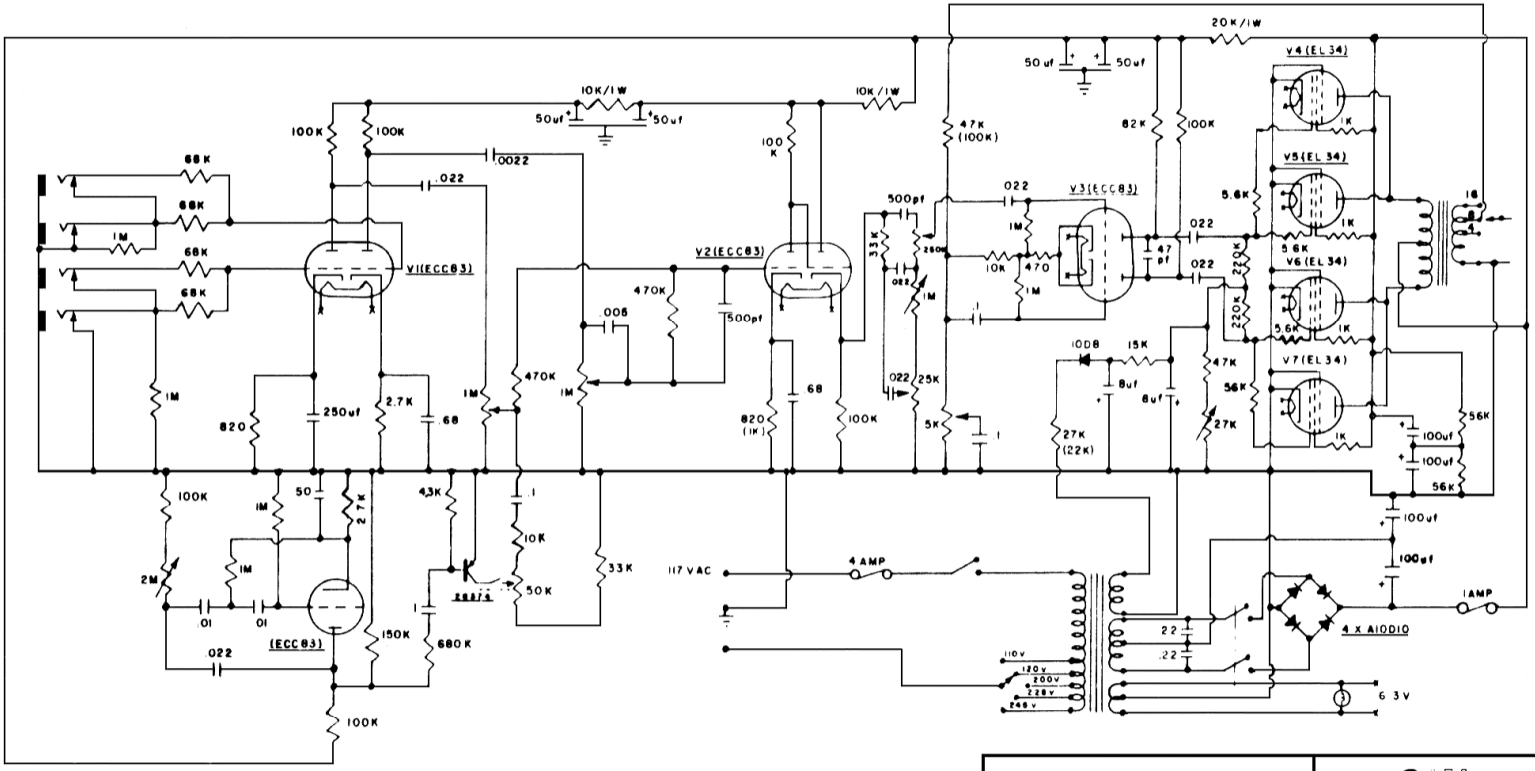
V1(ECC83)
V2(ECC83)
V3(ECC83)
V4(EL34)
V5(EL34)
V6(EL34)
V7(EL34)
(ECC83)
20K/1W
10K/1W
50uf
68K
1M
100K
.022
.0022
470K
500pf
33K
25K
5K
47K (100K)
82K
47 pf
5.6K
220K
56K
15K
8uf
27K (22K)
820 (1K)
250uf
2.7K
.68
4.3K
10K
50K
150K
680K
2M
.01
50
117 VAC
4 AMP
1AMP
4 X AIODIO
6 3V
110v
120v
200v
228v
240v
100uf
MARSHALL
1959T
SCALE
JULY 70
UNICORD INCORPORATED
70-11-11